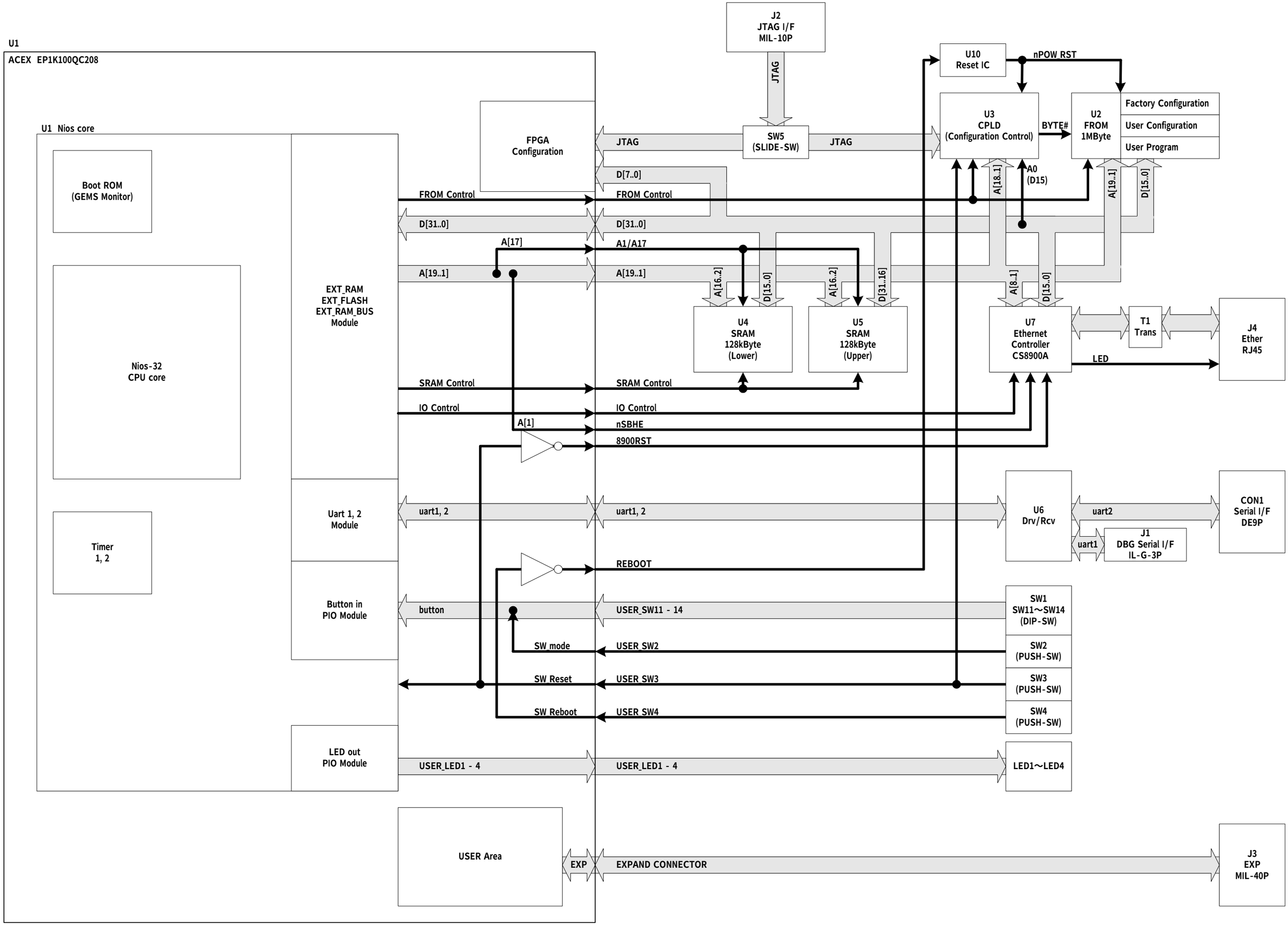
U1
ACEX EP1K100QC208
U1 Nios core
Boot ROM
(GEMS Monitor)
Nios-32
CPU core
Timer
1, 2
EXT_RAM
EXT_FLASH
EXT_RAM_BUS
Module
Uart 1, 2
Module
Button in
PIO Module
LED out
PIO Module
FPGA
Configuration
J2
JTAG I/F
MIL-10P
JTAG
SW5
(SLIDE-SW)
JTAG
JTAG
D[7..0]
FROM Control
FROM Control
D[31..0]
D[31..0]
A[17]
A1/A17
A[19..1]
A[19..1]
A[16..2]
D[15..0]
A[16..2]
D[31..16]
U4
SRAM
128kByte
(Lower)
U5
SRAM
128kByte
(Upper)
SRAM Control
SRAM Control
IO Control
IO Control
A[1]
nSBHE
8900RST
uart1, 2
uart1, 2
REBOOT
button
USER_SW11 - 14
SW mode
USER SW2
SW Reset
USER SW3
SW Reboot
USER SW4
USER_LED1 - 4
USER_LED1 - 4
U10
Reset IC
nPOW RST
U3
CPLD
(Configuration Control)
BYTE#
U2
FROM
1MByte
Factory Configuration
User Configuration
User Program
A0
(D15)
A[18..1]
A[19..1]
D[15..0]
A[8..1]
D[15..0]
U7
Ethernet
Controller
CS8900A
T1
Trans
J4
Ether
RJ45
LED
U6
Drv/Rcv
uart2
uart1
J1
DBG Serial I/F
IL-G-3P
CON1
Serial I/F
DE9P
SW1
SW11～SW14
(DIP-SW)
SW2
(PUSH-SW)
SW3
(PUSH-SW)
SW4
(PUSH-SW)
LED1～LED4
USER Area
EXP
EXPAND CONNECTOR
J3
EXP
MIL-40P